RAYTOOLS

BC106 SERIES

6KW High Power Laser Cladding Head - User Manual

Document History

Edit date	Version	Topic, revision, action taken
2024/8	V1.0	First edition

Thank you for choosing our product!

This manual describes the installation and commissioning of laser cladding head in details so that you can use this product quickly. You can consult us directly for more details.

Due to the continuous updating of product functions, the product you receive may differ from the introduction in this manual in some aspects.

We reserve all rights in this document including the issued patents and other registered commercial ownership related to this document. It is strictly prohibited to use this document in an improper way especially to copy and disseminate it to third parties.

If you find any errors in this document, please inform us as soon as possible. The data contained in this manual is only used to describe the product and shall not be regarded as a statement of security interest.

For the benefit of our customers, we will constantly try to ensure that the products we develop comply with the latest technology.

Raytools AG

Email: sales@raytools.com
Website: www.raytools.ch

Disclaimer

- We reserve the right to change the design in order to improve the quality or expand the application or comply to manufacturing workmanship.
- We will not bear any responsibility for losses and accidents caused by wrong operation or improper handling of our products.
- Dismantling of product will lose all warranty claims excluding the normal replacement of worn parts and components required for maintenance or commissioning operations.
- Unauthorized modification of products or use of non-original spare parts will directly lead to the invalidation of warranty and liability exemption.
- It is recommended to only use the spare parts provided by us or submit them to us or the designated professional team for installation.

Use Regulations

- Ensure that the product is used in a dry environment.
- Ensure that the product is used in the environment required by EMC standards.
- The product is only allowed to run within the parameters specified in the technical data.

Personnel Responsibilities

- Be familiar with the basic provisions of work safety & accident prevention and have received equipment operation guidance.
- Read and understand basic safety instructions and operations.
- You must have studied the relevant regulations and safety instructions and understand the possible hazards.
- Comply with relevant regulations and implement corresponding protective measures.

Safety Instructions

Prevent Electric Shock

- Parts of the laser head such as nozzle, sensor, sensor interface and attached fasteners may not be fully protected by the ground wire due to function fault. These parts may have low voltage. When installing electrical equipment, please pay attention to taking anti electric shock measures for relevant personnel.
- Note that the equipment shall be grounded as specified.

Guard against Danger

- Never put your hands or other body under the laser head.
- Repair and maintenance work can only be carried out after the power is turned off.
- Do not exceed the specified maximum pressure.
- It must be ensured that the laser head is in normal condition at all times.
- All fasteners such as bolts and nuts must be tightened.

Laser Caution

- Avoid direct laser radiation or scattering to the skin.
- Do not stare at the laser beam even when wearing optical equipment.
- Use special laser protective eyeglasses that meet the requirements of safety standards IEC 60825-1.

Prevent Waterway Corrosion

- In order to avoid corrosion, use the specified coolant and comply with relevant requirements and specified maintenance intervals.

Noise Prevention

- The corresponding measures shall be specified or explained and observed in order to prevent personnel from being harmed by noise when the cutting air pressure is high.

Storage and Transportation

- Observe the storage temperature range allowed by the technical data.
- Take reasonable measures to prevent fire, vibration or impact.
- Do not store in or near the magnetic field.

Contents

1 Overview

BC106 SERIES products are mainly used for cladding, including surface treatment and repair of metal molds, parts and shafts, widely used in automobile, aerospace, mining and other industrial fields.

This manual includes general information about BC106 laser cladding head, covering from mounting size and operation guide to maintenance. Since there are too many optical mechanism and custom configuration, only main parts of the laser head will be described.

Advantages:

- small thermal distortion
- shallow depth of fusion
- low dilution rate
- high strength
- selective laser melting
- available to process different alloy powders

1.1 Structure (with QBH Interface)

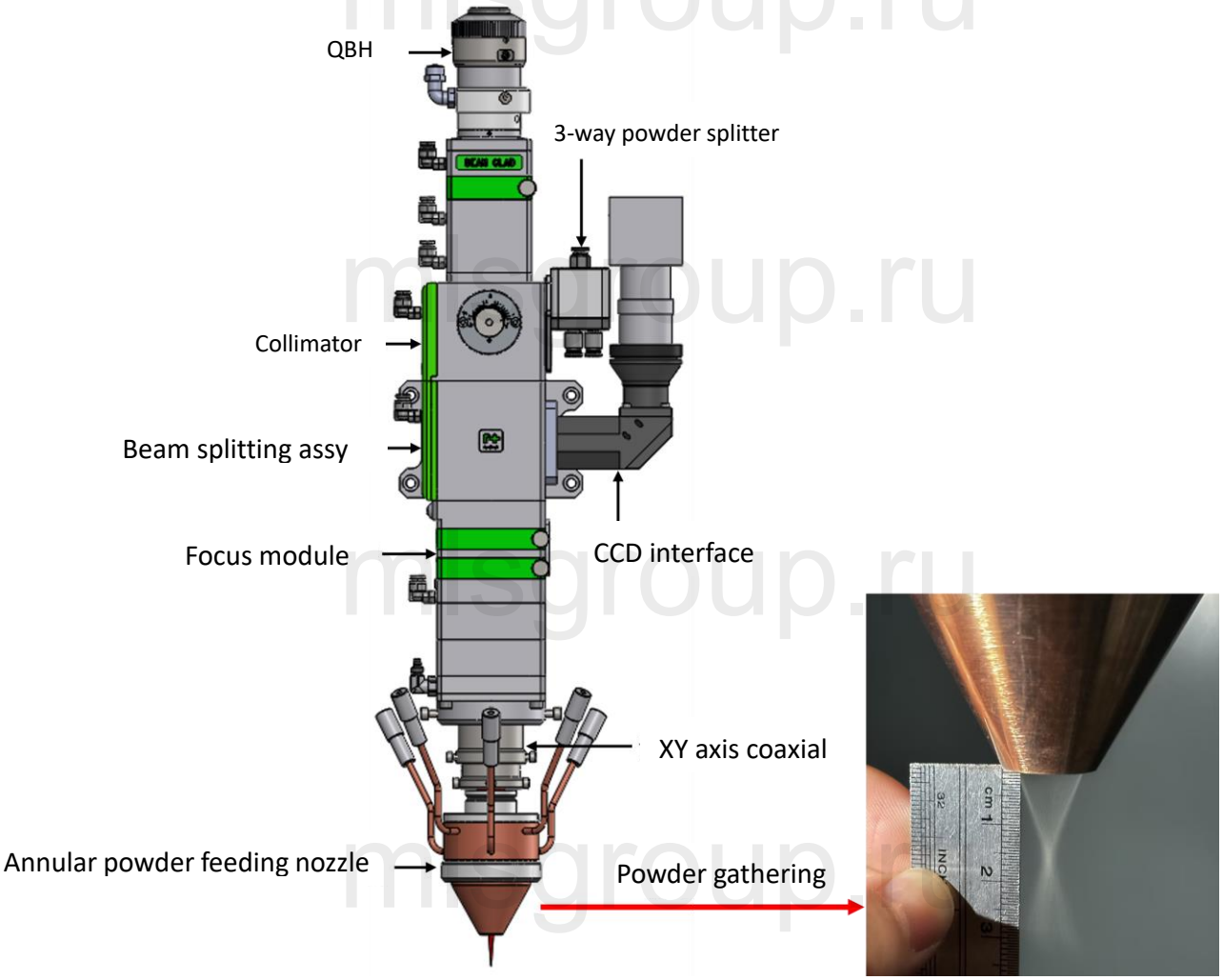

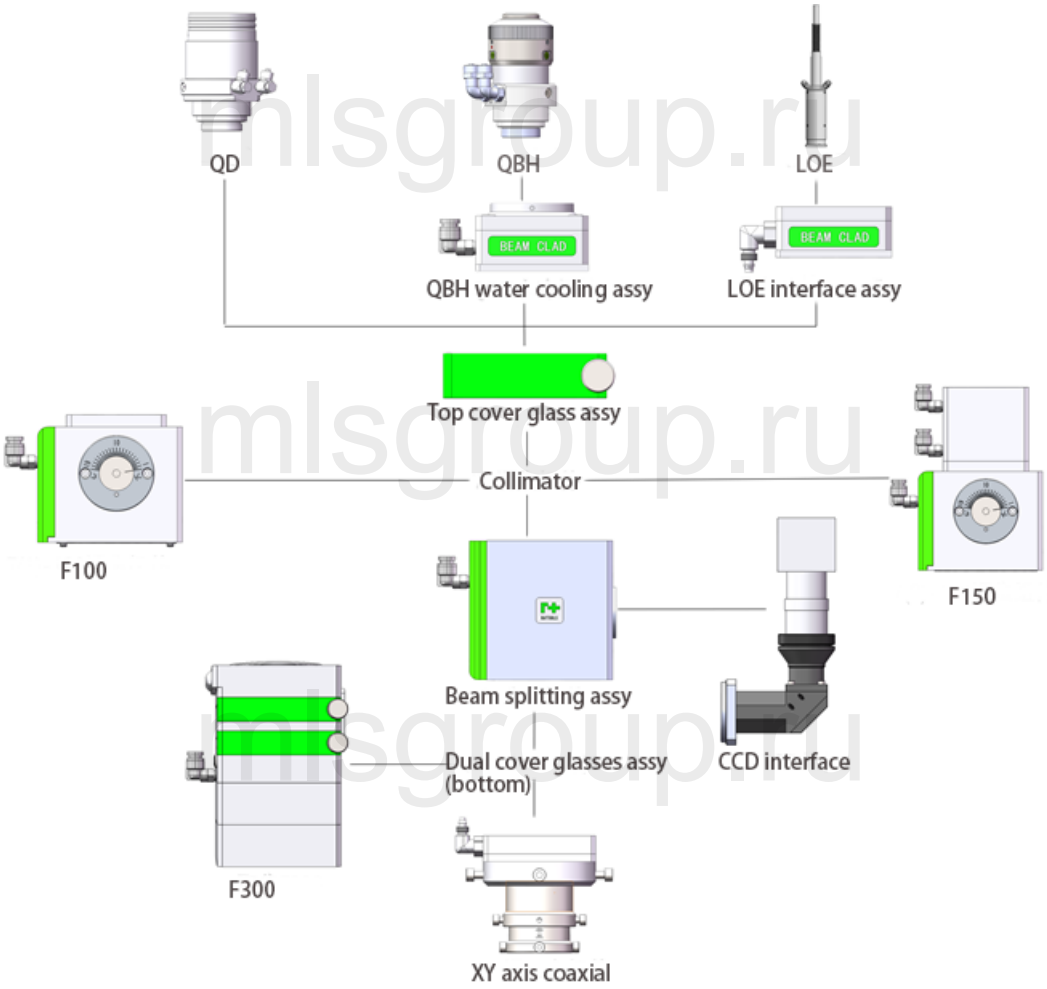

1.2 Function

1.2.1 Fiber interface assy

Support QD/QBH/LOE, available to work with different lasers in the market.

1.2.2 Top cover glass assy

Include top cover glass and holder, etc.

1.2.3 Collimator

Include collimation lens and lens holder (2 pics of lens are required).

1.2.4 Dual cover glasses assy (bottom)

With cooling system and drawer-type structure, convenient to replace;

high pressure resistance to bear high voltage impact of gas.

1.3 Technical Datasheet

Applicable Laser		Max, IPG, TRUMPF, Raycus, BWT, etc.
Fiber Interface		QD/QBH/LOE
Power		6kW
Clear Aperture		48mm
Collimation Length (fC)		100mm/150mm
Focusing Length (fF)		300mm
Wavelength		900-1100nm
Cover Glass Specification		D37 × 1. 6, 900nm-1100nm
		D 50 × 2, 900 nm-1100 nm
CCD module		SC/CS interface
Weight		about 5KG
Collimation adjustment range		0-20mm
nozzle	Gas	N2/Ar/He
	Powder utilization rate	About 75%
	Powder spot diameter	About 1.5 ~ 2.5 mm
	Angle	3/4-way powder feeding nozzle: ± 90 °adjustable Annular powder feeding nozzle: ± 30 °adjustable
	Powder particle size	About 53 ~ 150 μm

1.4 Configuration and Selection

1.4.1 Fiber interface

QD	Available lasers: IPG, TRUMPF, Raycus, etc.
QBH	Available lasers: Max, IPG, TRUMPF, Raycus etc.
LOE	Available lasers: Max
Other	Customizable

1.4.2 Configuration of collimation lens

Collimation Length (fC)	Item	Description
F100	Fused Silica biconvex spherical lens	900-1100, D50.8, F100
	Fused Silica meniscus spherical lens	900-1100, D50.8, F100
F150	Fused Silica biconvex spherical lens	900-1100, D50.8, F150
	Fused Silica meniscus spherical lens	900-1100, D50.8, F150
Other		Customizable

1.4.3 Configuration of focus lens

Focusing Length (fF)	Item	Description
F300	Fused Silica biconvex spherical lens	900-1100, D50.8, F300
	Fused Silica meniscus spherical lens	900-1100, D50.8, F300
Other		Customizable

1.4.4 Configuration of cover glass

Item	Configuration Description
Fused Silica cover glass	Top cover glass
	Dual cover glasses (bottom)
Other	Customizable

1.4.5 Configuration of optional parts (refer to Appendix)

Item		Remark
nozzle	3-way powder feeding nozzle	
	4-way powder feeding nozzle	
	Annular powder feeding nozzle	
Lens contamination detection box		contamination detection of bottom cover glass
powder splitter	3-way powder splitter	Usage guide: 3-way powder feeding nozzle - 3-way powder splitter 4-way powder feeding nozzle - 4-way powder splitter Annular powder feeding nozzle - 3-way powder splitter
	4-way powder splitter	
Other	Customizable	

2 Mechanical Installation

2.1 Fiber Insertion

WARNING: The optical components must be dust free and all dusts must be cleaned before use. The fiber shall be horizontally inserted into fiber interface to prevent dust from entering the interface and falling on the surface of the lens. Upper limit in the fiber before fixing the laser head.

1. Clean the dust on the QBH and fiber with polyester swab, absolute ethanol.

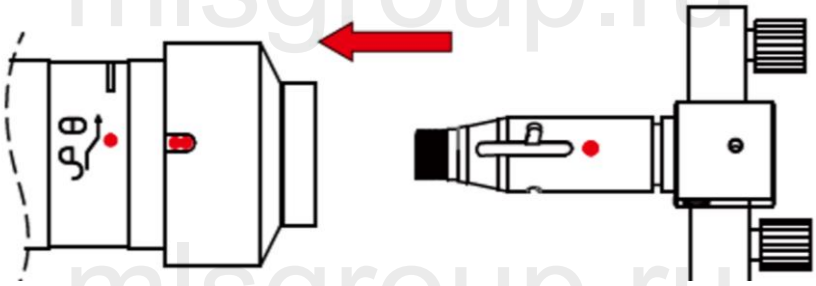

2. Align the red point at the end of the QBH interface to the red point of the handwheel.

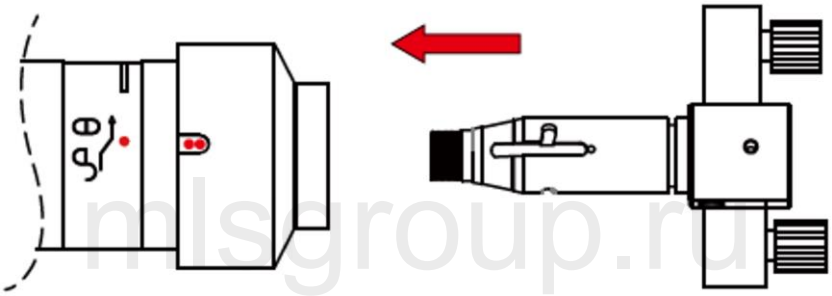

3. Align the red mark of male fiber end to red mark on female QBH of cutting head when you insert the fiber end straightly to bottom of QBH interface of cutting head.

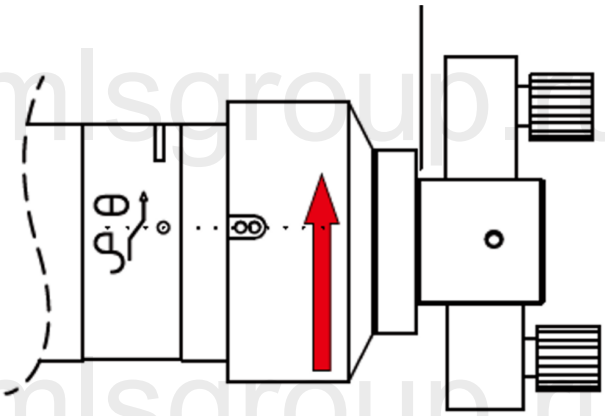

4. Pull the QBH handwheel up.

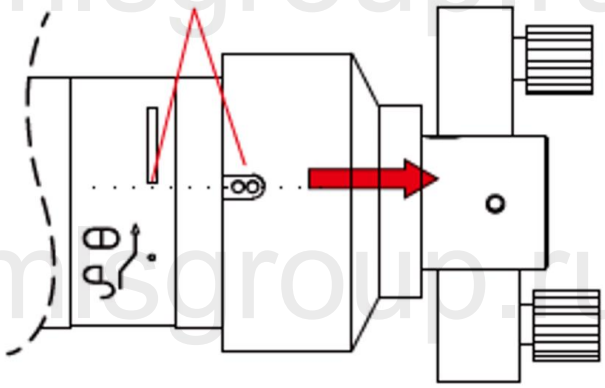

5. Turn the QBH handwheel clockwise gently until it’s tightened.

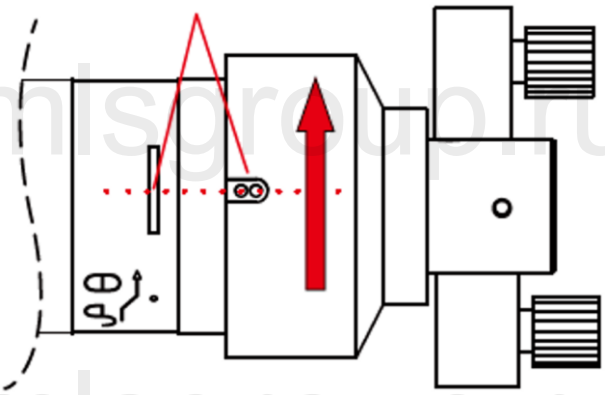

It is recommended to use textured tape to seal the connection of female and male fiber interface after the installation is finished in order to prevent from dust as much as possible in critical dusty environment.

2.2 Mounting of Laser Cladding Head

The mounting of laser cladding head to machine tool is shown as below. Customers are advised to Install the laser head perpendicular to the bed surface as requested and make sure the laser head is locked, which is one of the premises to ensure the stable welding.

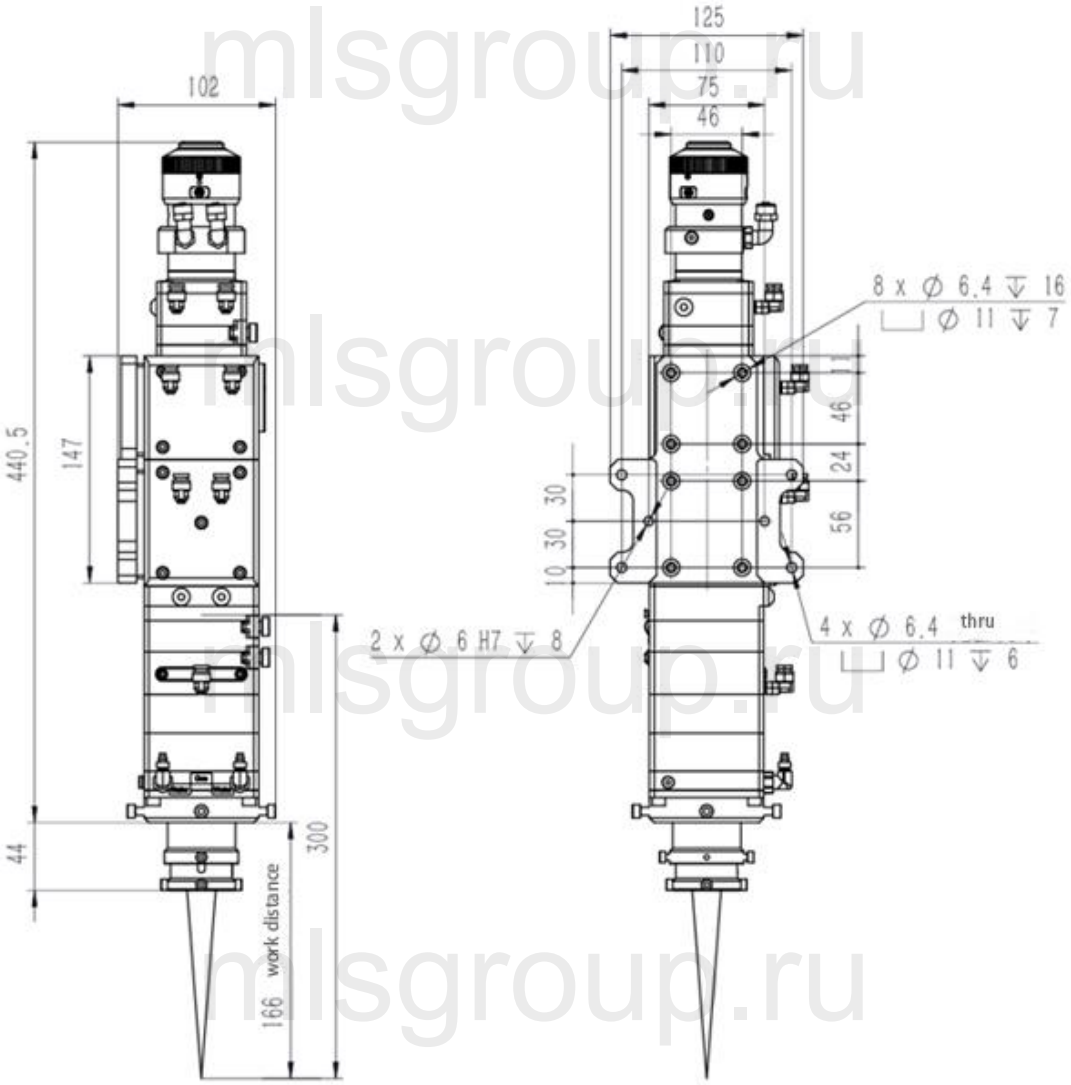

Optical Configuration: 100:300

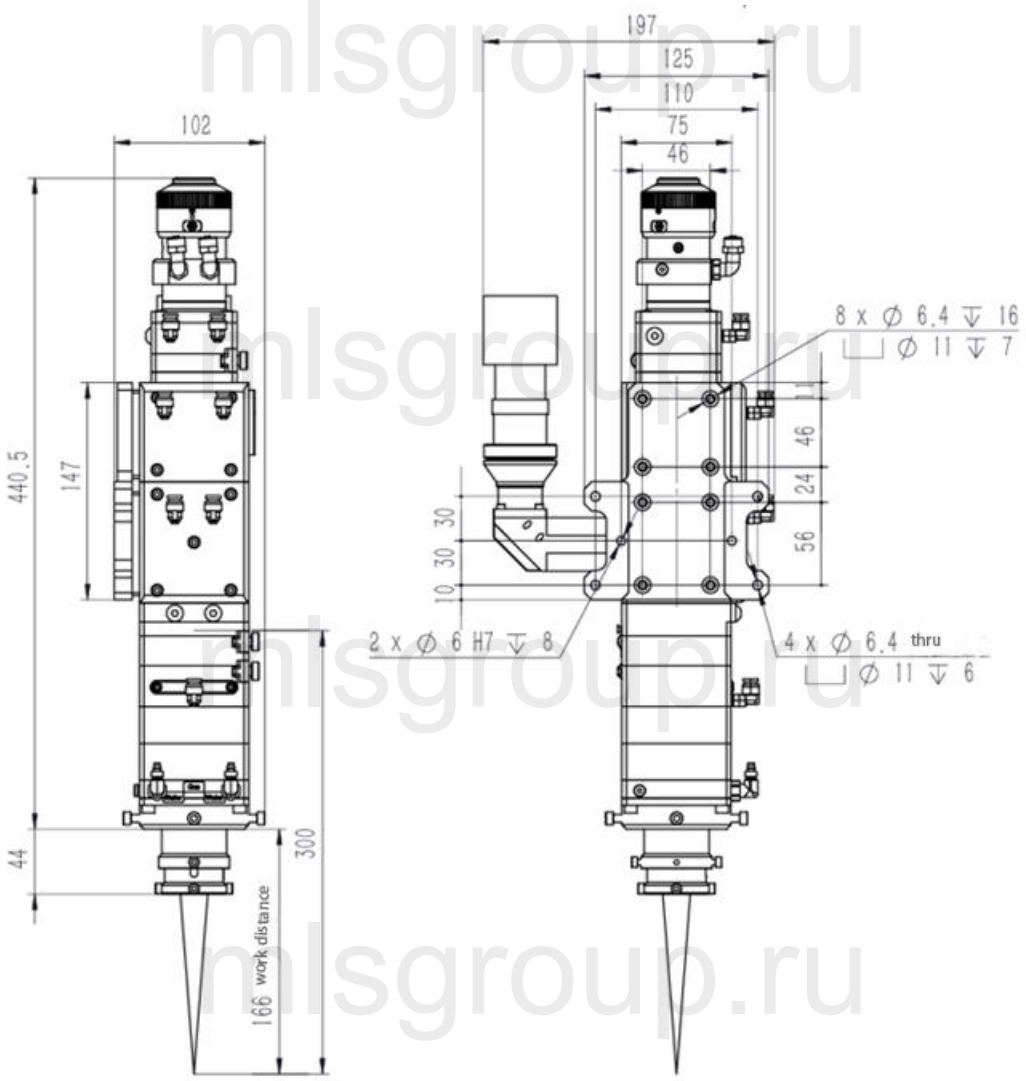

Optical Configuration: 100:300 (with CCD module)

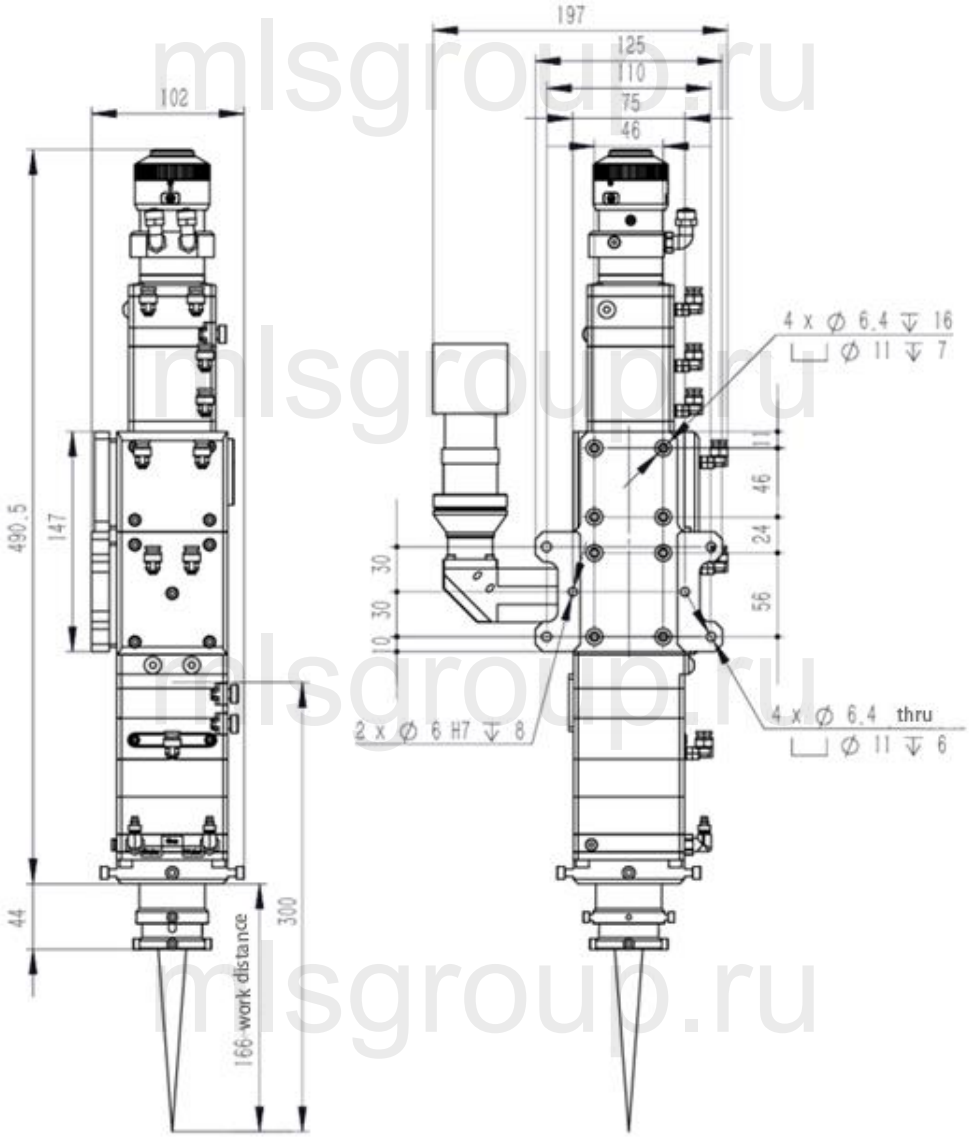

Optical Configuration: 150:300 (with CCD module)

2.3 Connection of Cooling Water, Gas and Powder Splitter

2.3.1 Connection of Cooling Water

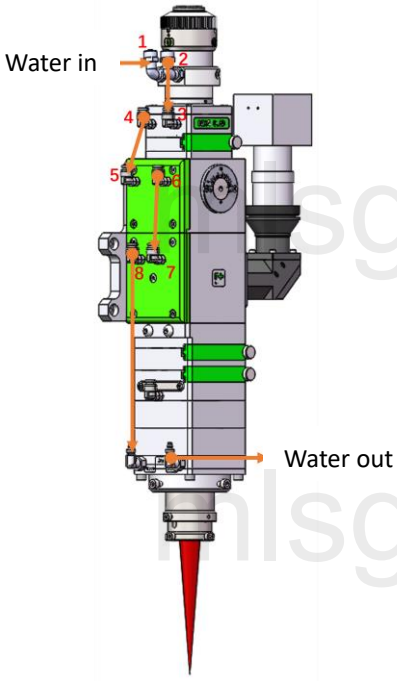

Optical Configuration: 100:300

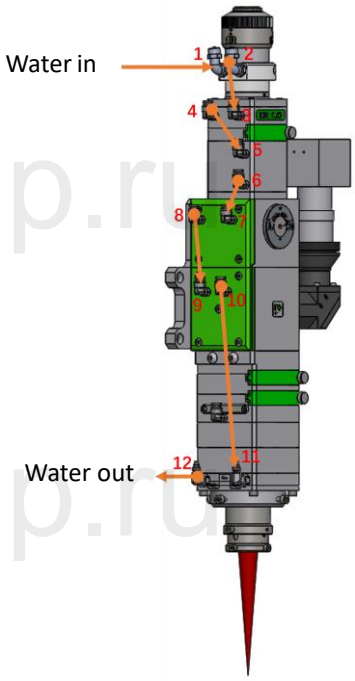

Optical Configuration: 150:300

Note: Cooling water from chiller should be divided into path by Y-shape connectors.

Outer diameter of water hose	6mm
Minimum flow speed	1.8 L/min (0.48 gpm)
Entry pressure	170-520kPa ((30-60psi)
Entry temperature	≧ room temperature/> dew point
Hardness (relative to CaCO3)	< 250mg/liter
PH range	6 to 8
Particle size allowed	diameter less than 200 microns

2.3.2 Connection of Gas

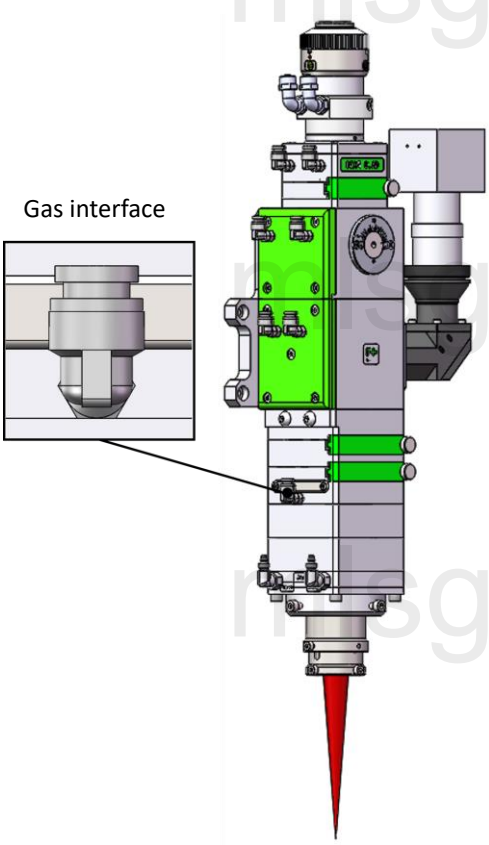

Optical Configuration: 100:300

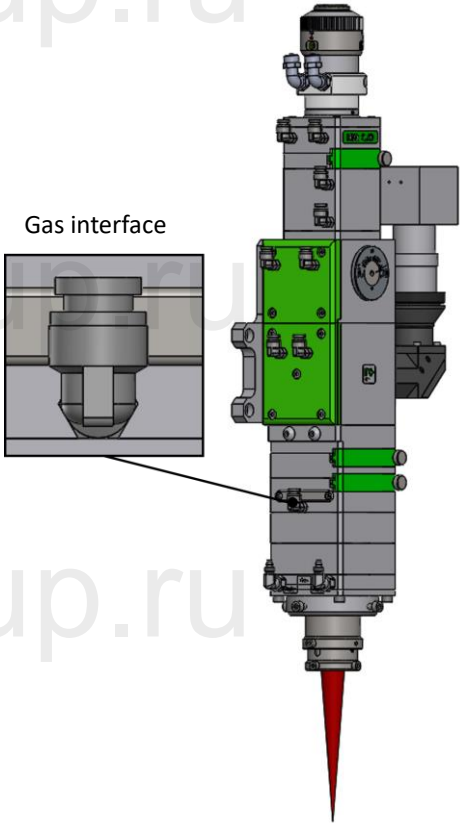

Optical Configuration: 150:300

Gas	Purity	Maximum content of water vapor	Maximum content of hydrocarbon
Nitrogen	99.99%	< 5ppm	< 1ppm
Argon	99.998%	< 5ppm	< 1ppm
Helium	99.998%	< 5ppm	< 1ppm
Diameter of cutting gas pipe (Outer diameter)		6mm	
Gas Pressure		0.3-0.5 MPa	
Flow Speed		5-20 L/min	

2.3.3 Connection of Powder Splitter

Take 3-way powder splitter as reference.

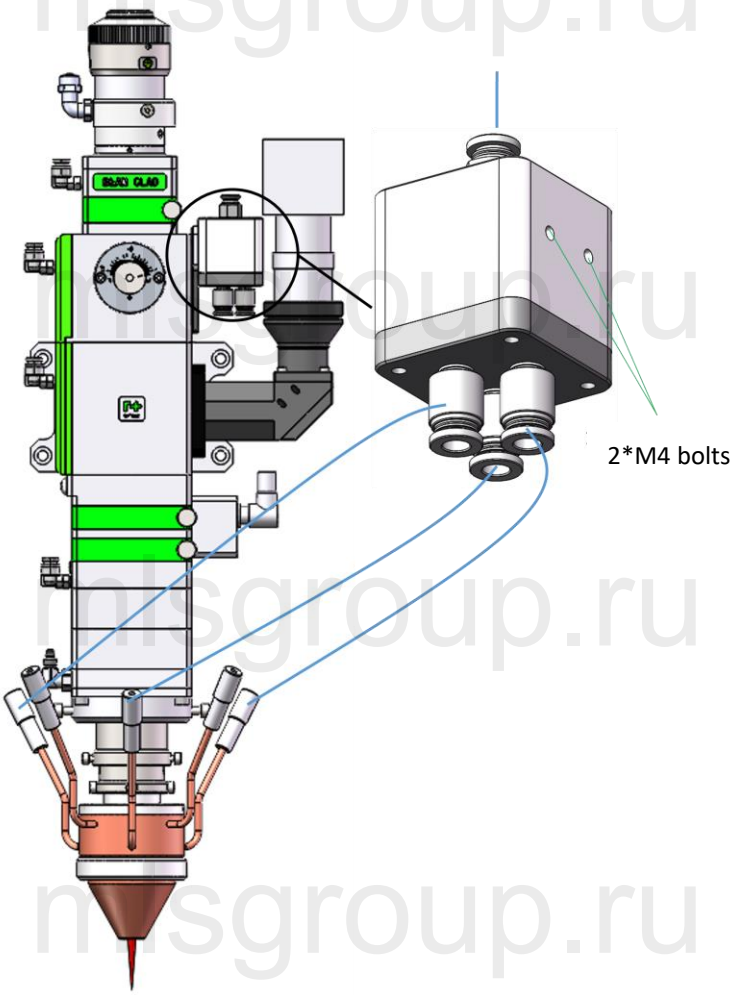

Connection method:

outlet of powder feeder → inlet of 3/4-way powder splitter → outlet of powder splitter → nozzle.

Item	Remark
3-way powder splitter	Vertically placed
Powder range	20-250 µm
Powder pipe diameter (outer diameter)	6mm
Gas	inert gas
Flow speed	4-15 L/min

2. 3. 4 Coaxial Adjustment

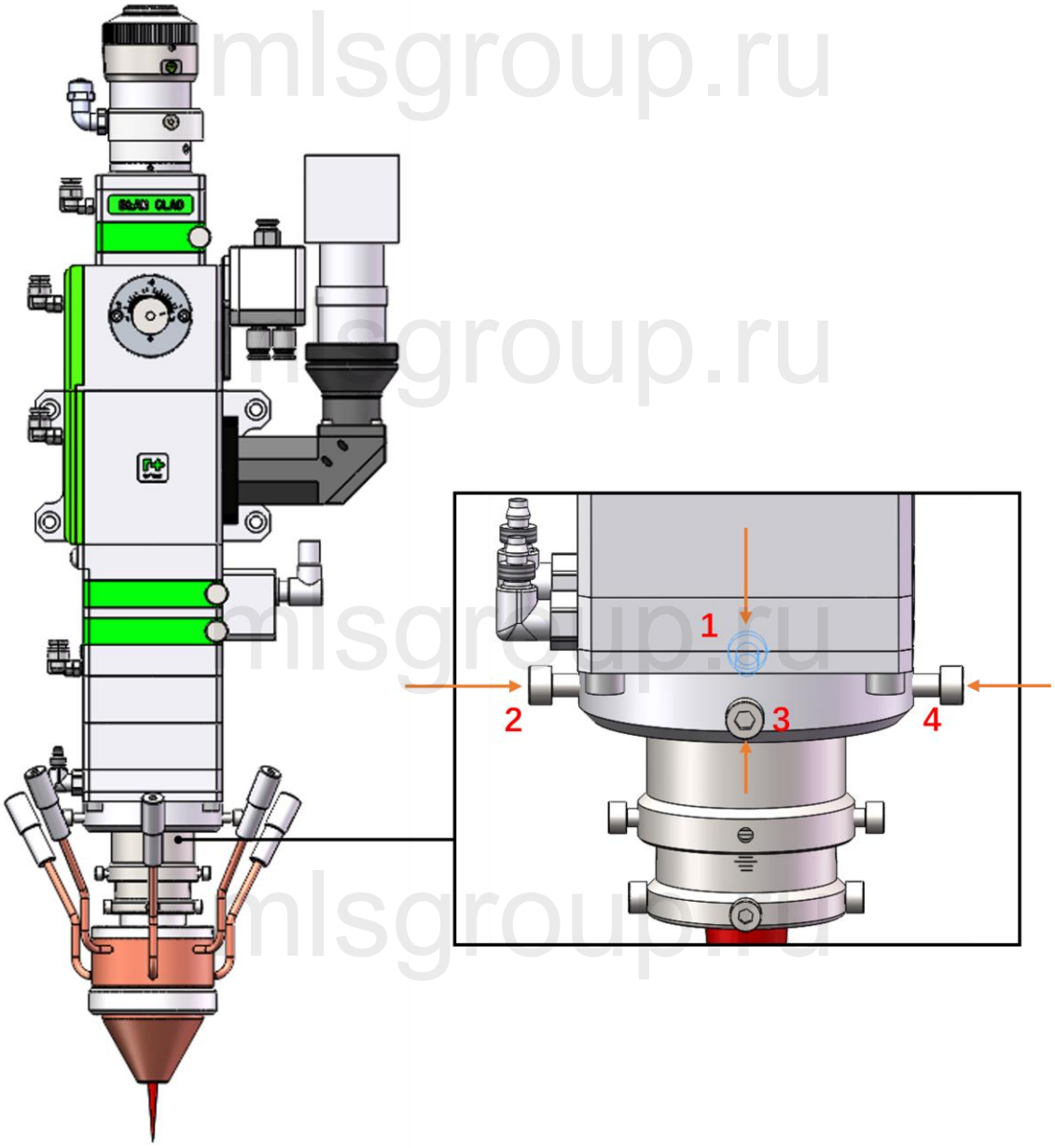

- Loosen the bolts as above (1/2/3/4);
- Adjust bolts to adjust the red light to the center position;
- Tighten the bolts.

Note: Concentricity has been adjusted before selling. But long-distance transportation may cause certain deviation, so users should check the concentricity before laser on.

2.3.5 CCD Interface Adjustment

(1) focus adjustment

Rotate (1) to adjust focal length.

(2) aperture adjustment

Rotate (2) to get proper image brightness.

(3) brightness adjustment

Rotate (3) to get clear image.

(4) field center

Loosen/tighten 4*M4 screws (4).

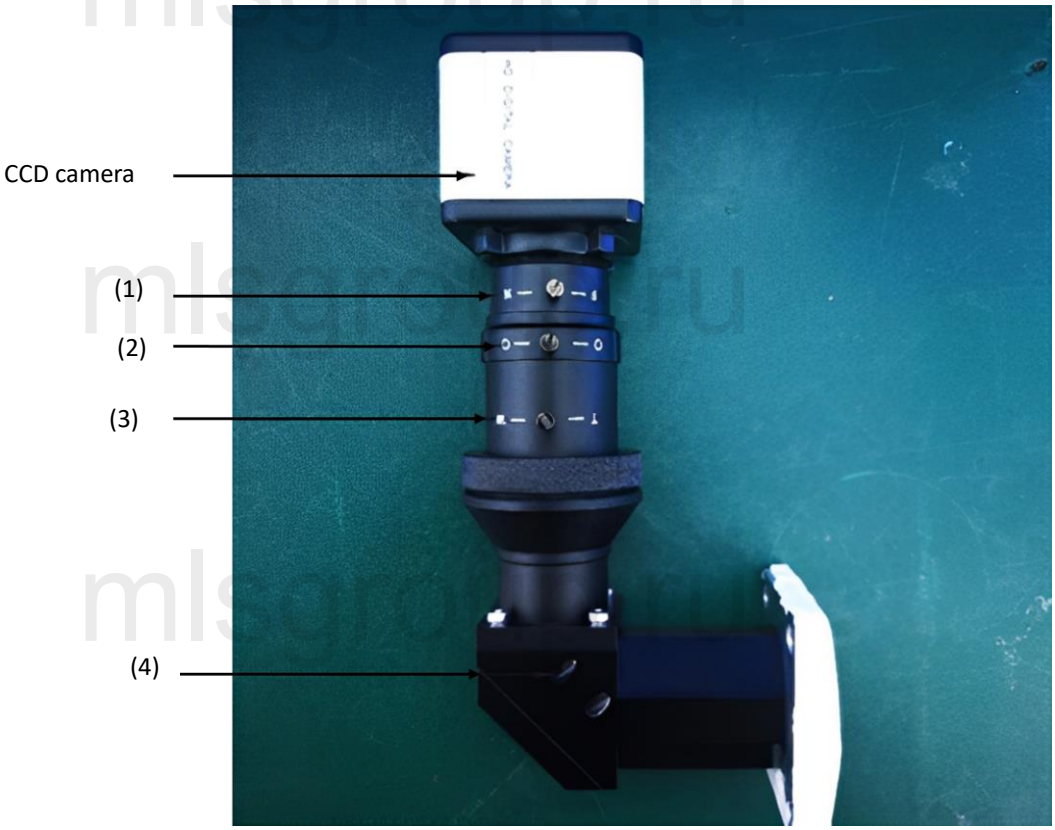

3 Maintenance

3.1 Cleaning Lens

The cover glass should be cleaned regularly according to the steps shown below:

1. Take the side face of the glass with gloves, refer to figure (A). Do not touch the top and bottom surfaces with fingers;
2. Put the cleanroom wiper on the glass, and use 2-3 drops of lens cleaner, as shown in figure (B);
3. Slowly drag the cleanroom wiper horizontally and ensure no mark. Then, the glass will be clean. This step can be repeated till it is clean. Every time use a new piece of cleanroom wiper. Refer to figure (C);
4. With serious stains, a cleaning swab will be needed. Spray the lens cleaner on the swab, and then use it to clean the glass. Move the cleaning swab from the inside, anticlockwise, in a circular motion, with gentle force on the glass surface. Rotate the swab along the vertical axis gently to ensure the effect. Refer to figure (D).

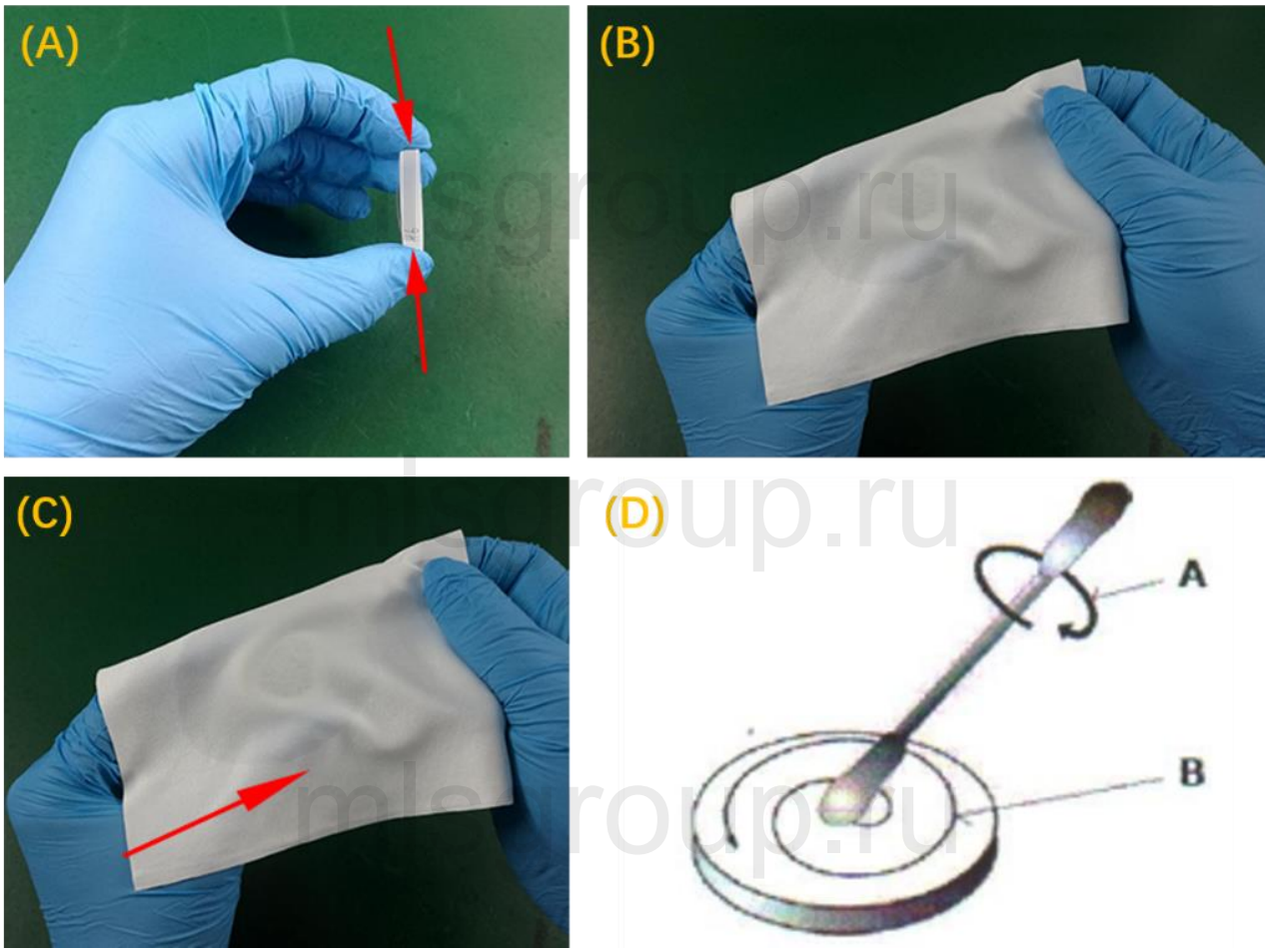

3.2 Removal and Installation of Top Cover Glass

The whole process needs to be completed in a dust free room. Wear dust-proof gloves or fingertips when removing or installing the lenses.

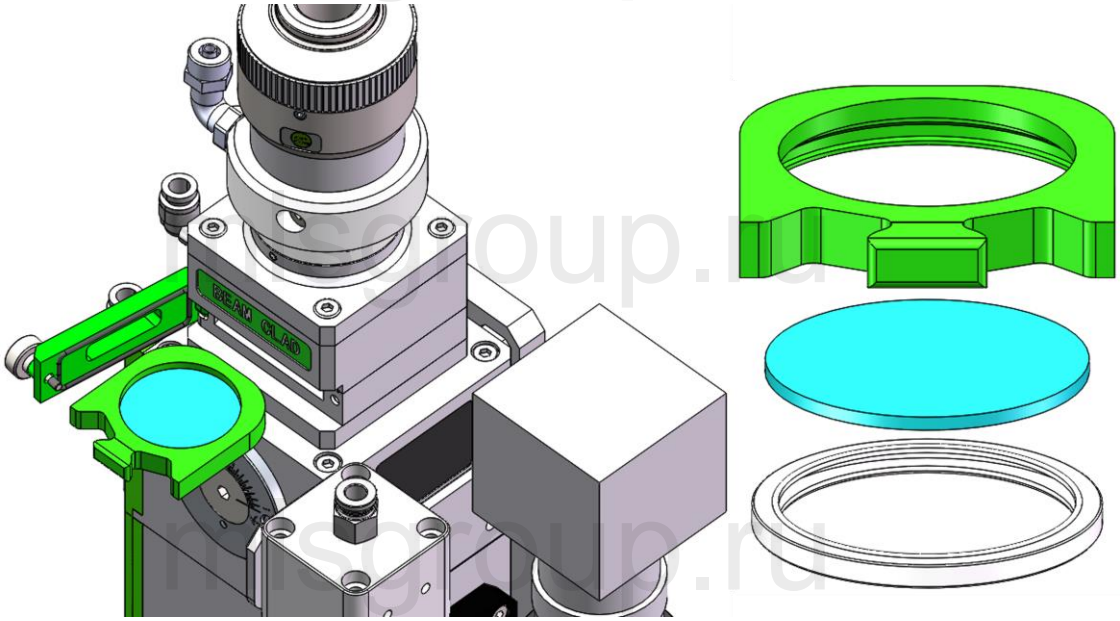

- As shown above, loosen the bolts to pull out cover glass holder;
- Remove the cover glass;
- Clean the cover glass holder and seal ring;
- Install the cleaned or new cover glass (regardless of the front or back surface) into the holder of cover glass;
- Install the pressing ring;
- Insert the cover glass holder back to the laser head and tighten the bolts.

Caution: Do not take out the seal ring on the cover glass with fingernails or any hard tool, which will cause gas leakage and serious damage to the lenses. Place the seal ring properly to guarantee its use.

3.3 Removal and installation of Dual Cover Glasses (Bottom)

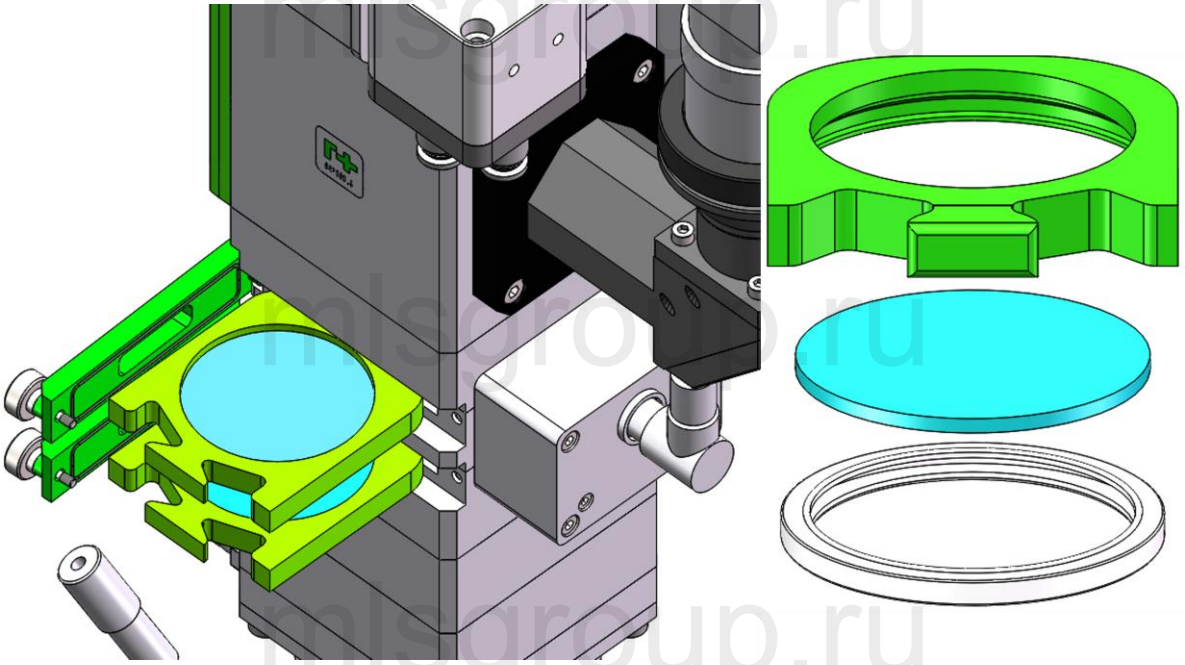

- As shown above, loosen the bolts to pull out cover glass holder;
- Remove the cover glass;
- Clean the cover glass holder and seal ring;
- Install the cleaned or new cover glass (regardless of the front or back surface) into the holder of cover glass;
- Install the pressing ring;
- Insert the cover glass holder back to the laser head and tighten the bolts.

Caution: Do not take out the seal ring on the cover glass with fingernails or any hard tool, which will cause gas leakage and serious damage to the lenses. Place the seal ring properly to guarantee its use.

3.4 Replace Ceramic Body and Nozzle

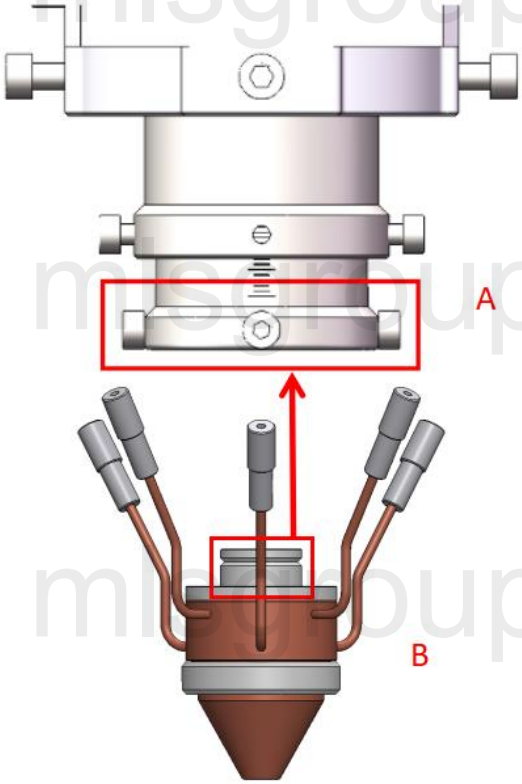

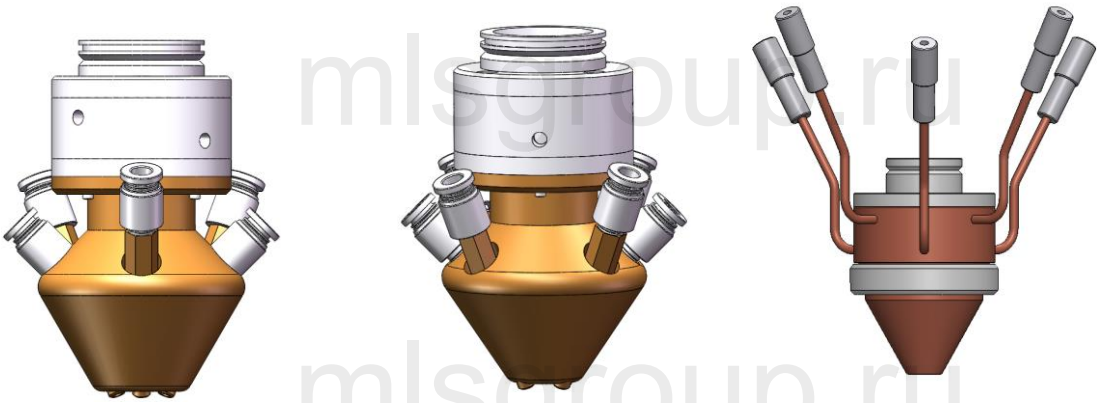

The nozzle is required to be replaced if it gets crash or damaged by laser beam. The dirt on ceramic body is required to be cleaned or to replace the ceramic body if it gets crash.

- Loosen 4 bolts of nozzle connection pipe (A).
- Connect the nozzle adapter with the concentricity adjustment pipe (B).
- Screw the nozzle adapter to the bottom.
- Tighten the bolts.

Appendix

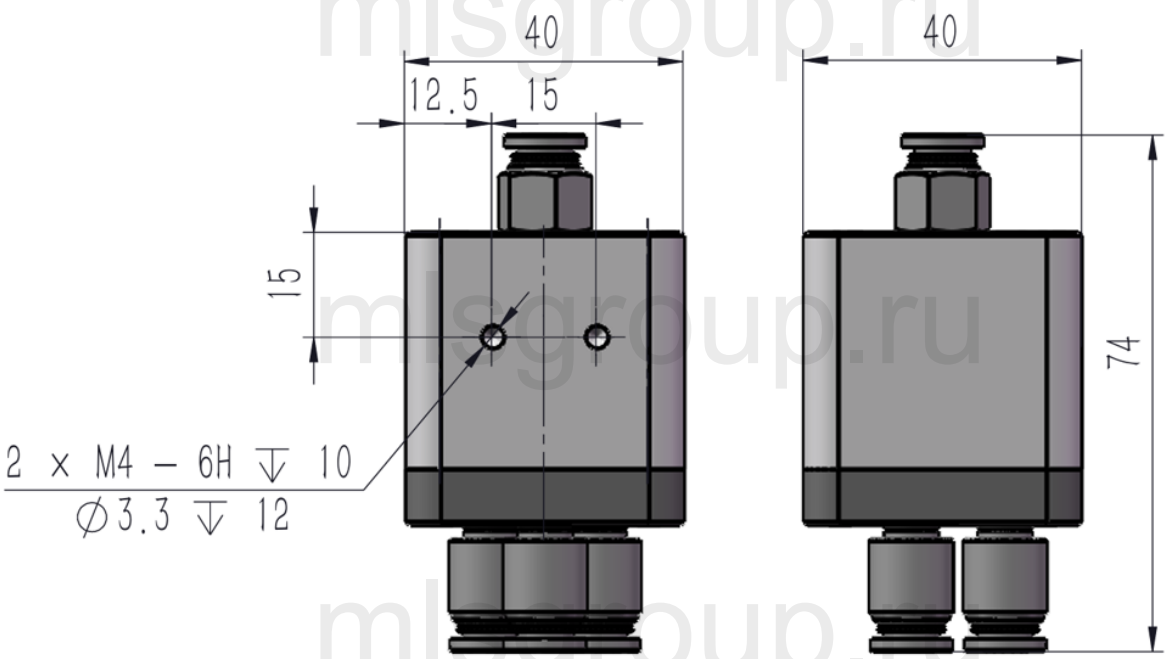

3-way powder splitter

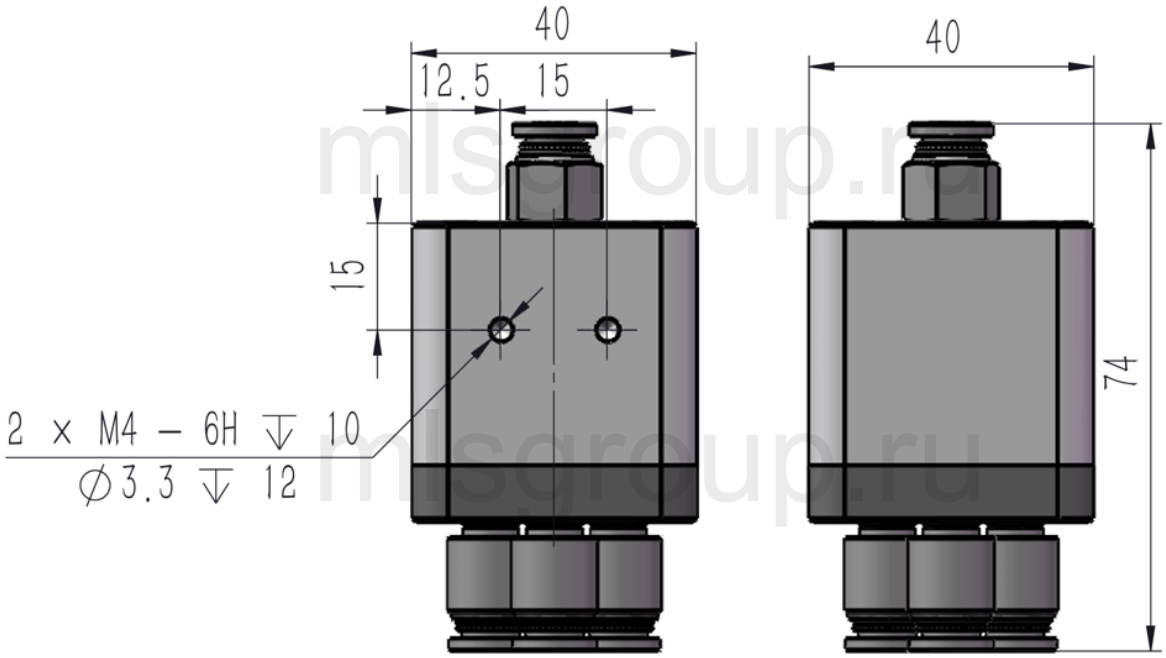

4-way powder splitter

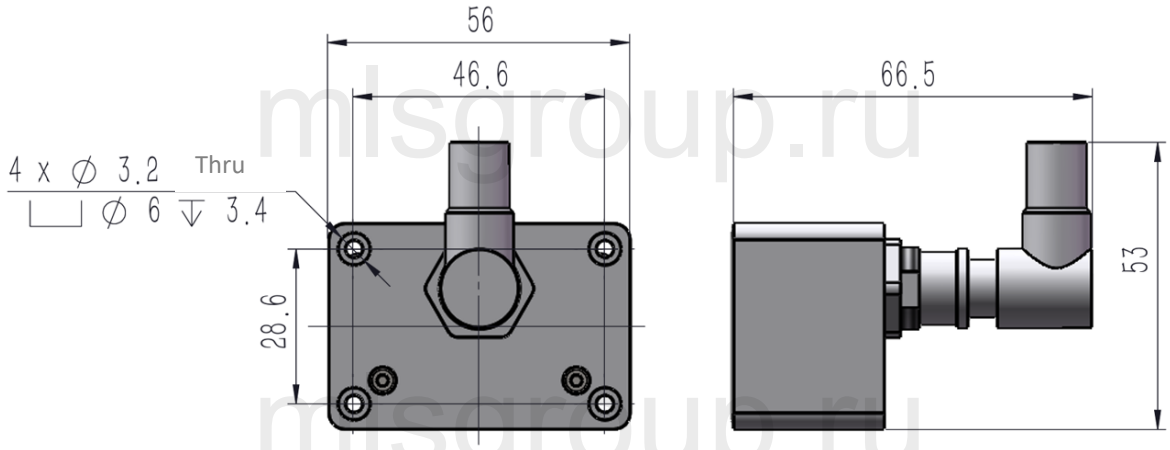

contamination detection box

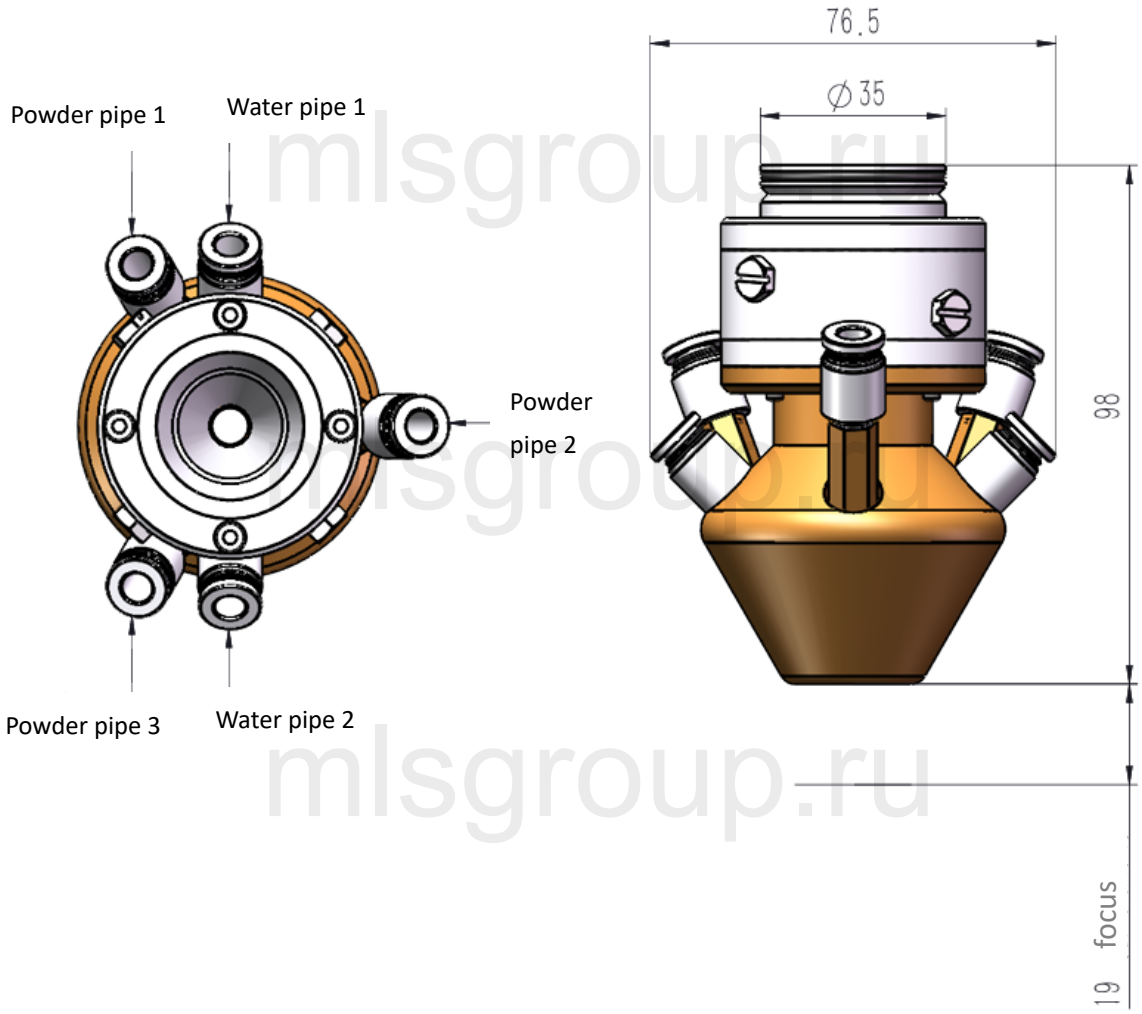

3-way powder feeding nozzle

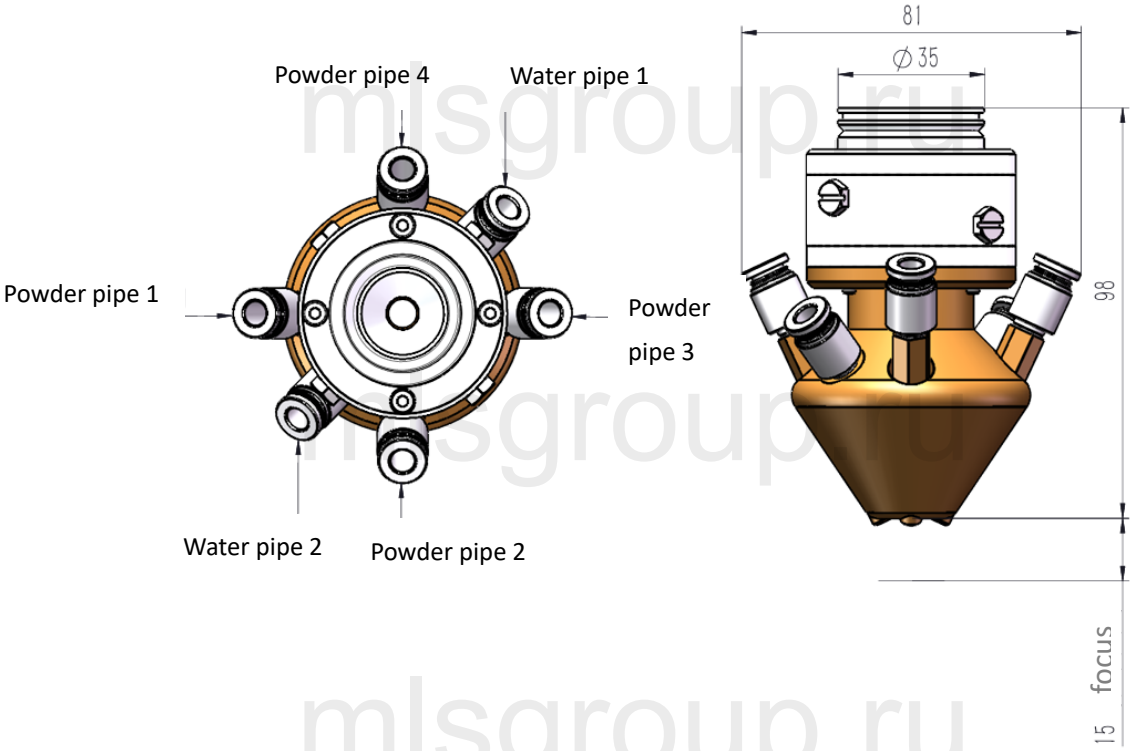

4-way powder feeding nozzle

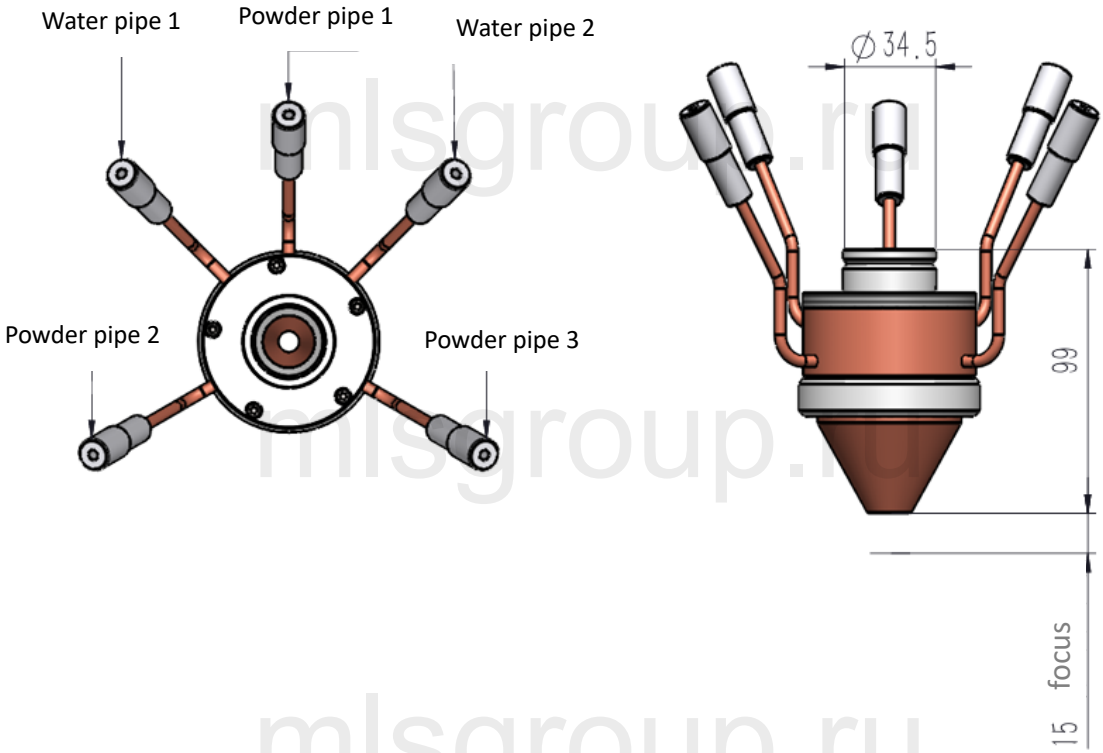

annular powder feeding nozzle